The Faisca F6 is an intelligent and high-powered architectural marker light. The simple yet elegant design allows for easy and rapid installation. Plug and play electrical connections further contribute to the quick and easy installation process and protect against incorrect connections.

Leader cables of up to 50m (164') give great flexibility when it comes to installation as power supplies and control equipment can be housed well away from the luminaires.

The F6 utilises high quality LEDs achieving high intensity whilst maintaining beautiful, rich and vibrant colours. To the viewer the F6 has perfectly even Illumination and colour consistency.

The Fascia can be integrated into a single PowerSync™ 4 LV network alongside other PowerSync™ 4 LV enabled products. This interconnectivity enables the easy deployment of captivating, mixed facades without complication.

From highlighting architectural elements to super smooth crossfades and colour flows, imagination is the only limit to what can be achieved with a combination of luminaires in a PowerSync™ 4 LV network.

Performance

Source	Optics	Lumen Output (lm)	Efficacy (lm/W)
RGBW with Royal Blue	Transparent Flat Lens	1,327	65.14
RGBW with Royal Blue	Diffused Domed Lens	1,000	53.9
4,000K	Transparent Flat Lens	1,980	98
4,000K	Diffused Domed Lens	1,540	76

powersync™ easyglow™ cooldrive™

Performance

Optics	Diffused Domed Lens Transparent Flat Lens

Electrical

LED Power	16W
Consumption	≤20W
Lifetime (L70)	>60,000 hrs (B10, L70, TM21)
Input Voltage	30-48V DC
Thermal Management	CoolDrive™ onboard thermal monitoring, control and reporting.

Control

Interface	Lumascape PowerSync™ 4 Low voltage
Protocols	DMX/RDM, Artnet, PWM(1), sACN, 0-10V (sink or source)(1), Phase dimming(1) For other protocols contact factory Not available for Colour Changing
PWM Frequency	2,000 Hz flicker free dimming to 0.1%
Systems	Compatible with all third party Artnet and sACN control systems including Pharos and Madrix

Physical

Housing	Die cast marine grade aluminum, UV stabilised polymer diffuser.
Finish	Superior 9-step powder-coating process, including marine epoxy undercoat and polyester top coat.
Installation	Surface-mounted
Ambient Operating Temperature	-40°C to 50°C (-40°F to 122°F)
Surface Temperature	≤50°C (122°F)
Weight	1.3kg (2.9lb)

Certification & Compliance

IP Rating	IP66 / IP67
IK Rating	IK10
Environment	Dry, Damp, Wet locations
Certifications	ETL, CE, RCM, CCC (pending)

Luminaire Dimensions - Standard Configuration

Flat Lens, Transparent (DF)

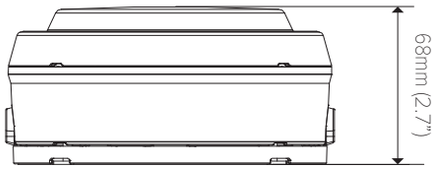

Domed Lens, Diffused (DC)

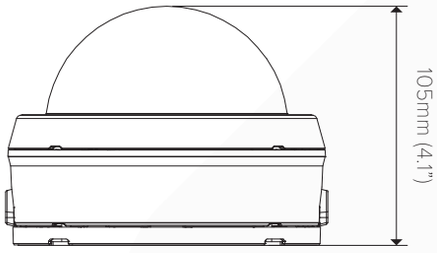

Luminaire Connection Type - (Connectorised)

Side Entry

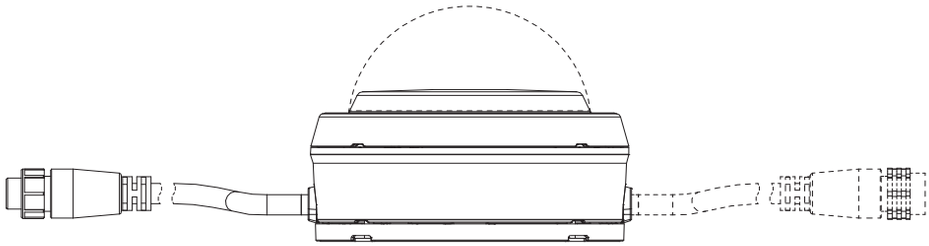

Bottom Entry

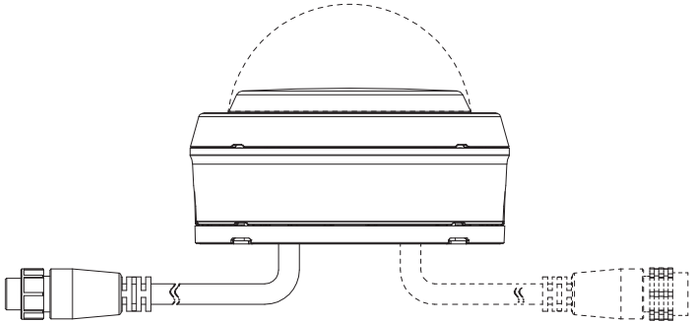

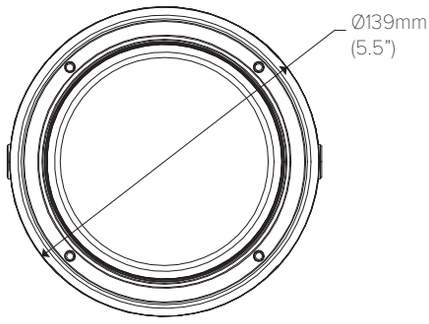

North American configuration, complete with Junction Box Accessory (order separately)

Flat Lens, Transparent (DF)

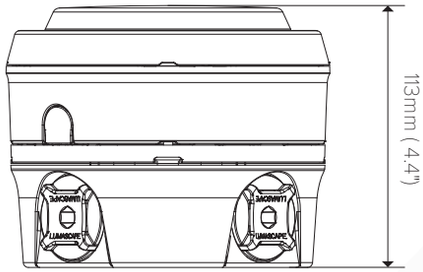

Domed Lens, Diffused (DC)

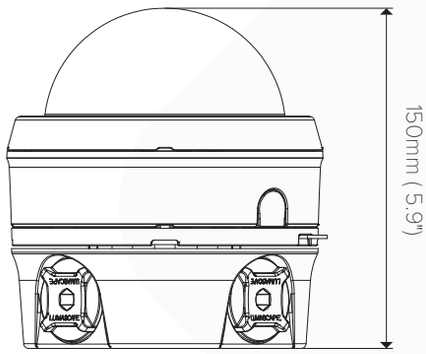

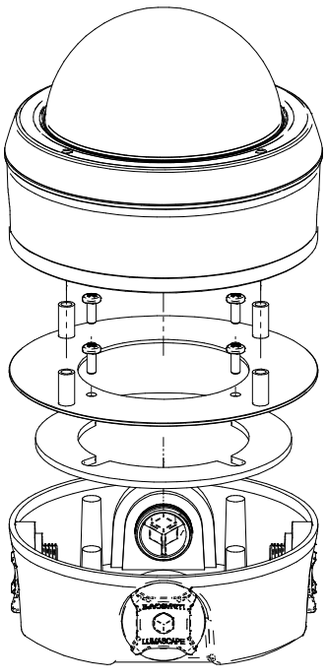

LS6327 - UL Junction Box Accessory
Order LS6327 separately
For use with connection type '82' (Hookup wire)

LS9260	16W							

Power	Code
16W	16W

Static White & Colour	Code
3,000 K (80 CRI)	830
4,000 K (80 CRI)	840
Red	RED
Green	GRN
Royal Blue	RBL

Dynamic Colour	Code
RGBA	4CA
RGBW with Royal Blue	4BW

Connection Type	Code
Flexible cable, single entry, for connectorised installations	67
Flexible cable, double entry, for connectorised installations	63
Single entry, flexible cable for hardwired installation	84
Double entry, flexible cable for hardwired installation	83
Hookup wire for hard wired installations	82[1]

(1) North American market only.

Optics	Code
Flat Lens, Transparent	DF
Domed Lens, Diffused	DC

Cable Entry	Code
Side	N
Bottom	Q

Input Voltage	Code
30-48V DC	07[1]
30-48V DC	13[2]

(1) International market
(2) North American market

Control	Code
Non-Dim	ND[1]
Powersync™	PS[2]

(1) For single colour, non-dimming applications only.
(2) Required for all dimming and colour changing applications. LS6550 Data Injector required - order separately

Finish	Code
Black	BL
Anthracite Grey	AG
Basalt Grey	BT
Anodic Silver	SL
White	WT
Dark Bronze	DB
Latte	LT
Dark Aluminum	DA
Custom RAL	CC[1]

(1) Please provide RAL colour.

Network Topology - PowerSync™ Low Voltage

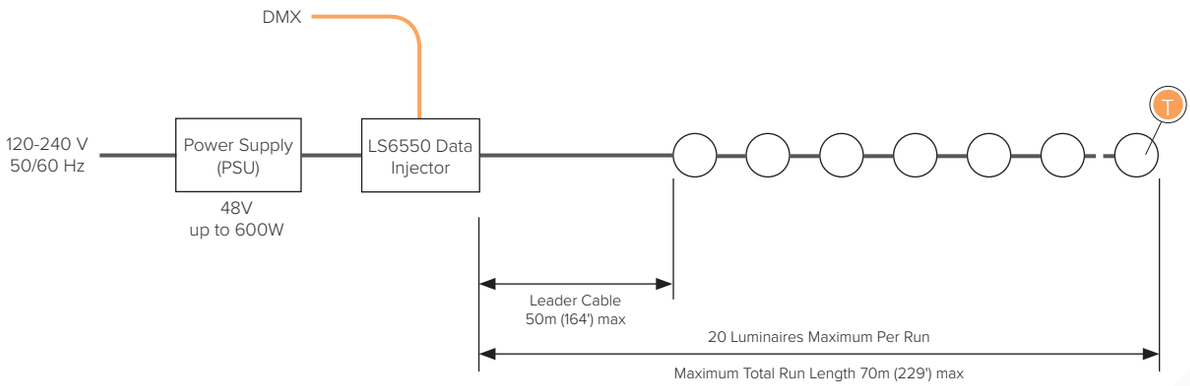

Terminator
Use PowerSync™ terminator, supplied with leader cable to terminate last luminaire in chain.

Maximum Current
Through Cables & Connectors ≤12.8A.

Connection Type
Circuits are configured as connectorised. For details consult installation instructions and comply with local electrical codes.

Up to 20 luminaires per 48V PowerSync circuit / LS6550

Maximum Circuit Loading - Single Run						
LED Power	Max Leader Cable Length from LS6550 to first fitting	Maximum number of luminaires / 48V Power Supply				
		120W	240W	320W	480W	600W
20W	15m / 50ft	4	9	12	17	20
	30m / 98ft	4	9	11	16	18
	50m / 164ft	4	8	10	14	15

Values in the above table show the maximum circuit loading per 48V circuit.
Values are based on 1.2m (4.0') spacing. Smaller spacing may effect the circuit loading.
Extended fixture cables, inclusion of jumper cables, or longer leader cable will effect loading. Contact factory for details.
Circuits can be made up of up to 20 fixtures, up to the maximum circuit loading in the table above.
Circuits are limited to maximum 12.8A.
For non-continuous runs, contact factory for details.
For assistance, contact Lumascape.

NOTE: The above diagrams are intended to show electrical pathways between luminaires and ancillary device. These diagrams are not intended to show type or colour of cord / wire, luminaire input voltage rating, wire gauge or approved use of the cord / wire supplied with luminaires.

powersync tm

Connectorised Accessories

Cables & Connectors (Connection Type 67 & 63 Only)

Leader & Jumper Cables	Code
Leader Cable 10m (33')	LS6426-033
Leader Cable specify custom length in feet - 30m (100') max.	LS6426-xxx
Jumper Cable 0.3m (1') fixture gap spacing	LS6427-001
Jumper Cable 0.6m (2') fixture gap spacing	LS6427-002
Jumper Cable 1.2m (4') fixture gap spacing	LS6427-004
Jumper Cable 3m (10') fixture gap spacing	LS6427-010
Jumper Cable specify custom fixture gap spacing in feet - 30m (100') max.	LS6427-xxx

Terminator	Code
Terminator for use with connectorised luminaires	LS6437

Note: Order separately for spare parts and split runs only.
(1) Terminators are supplied with LS6540.
A terminator ships with every leader cable.

Wire Colours & Designations

Low Voltage

Designation	Colour
Positive	Red
Negative	Black
Data	Grey / Black